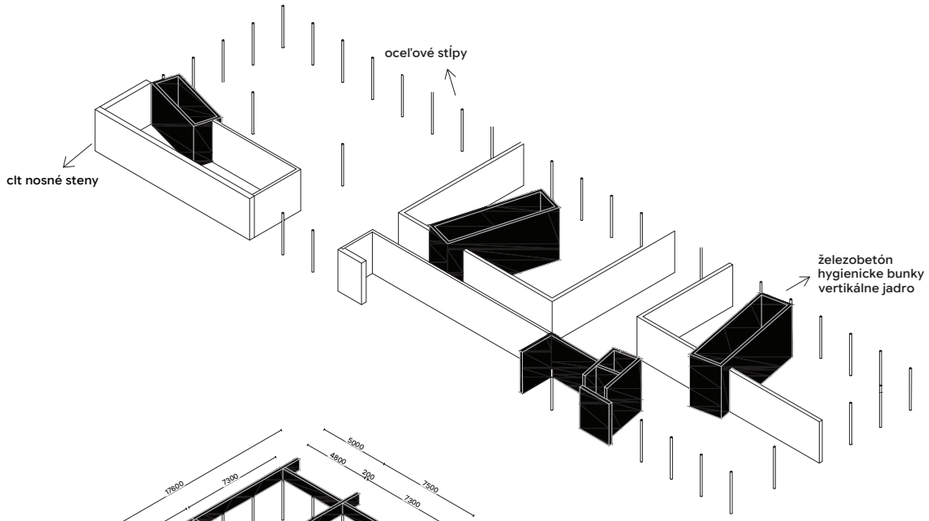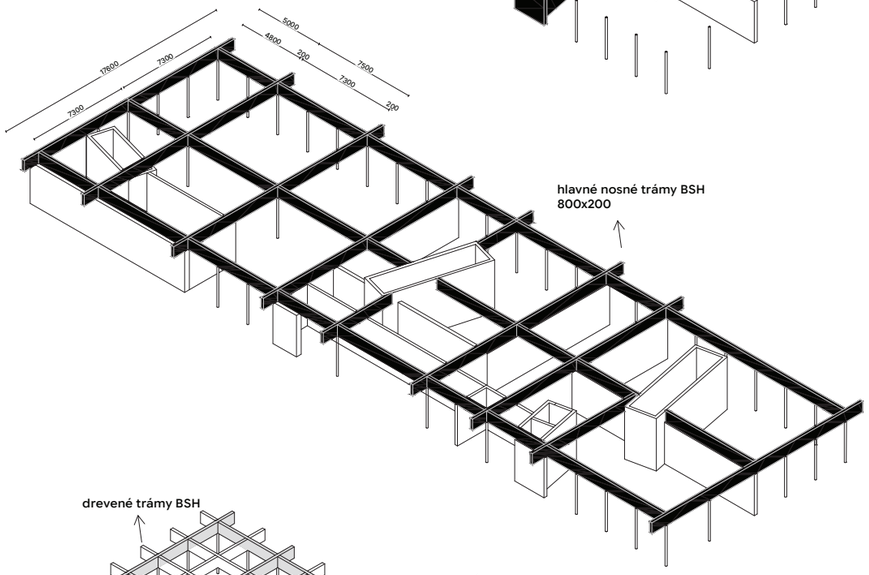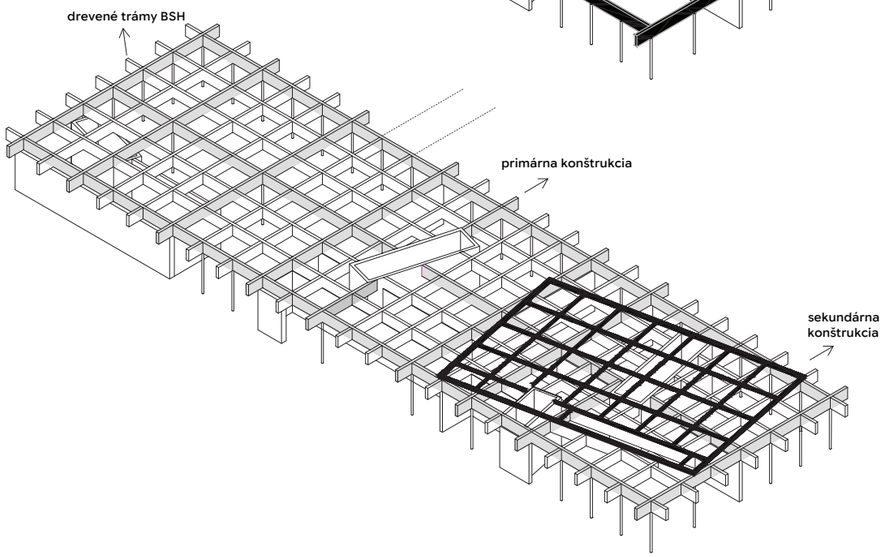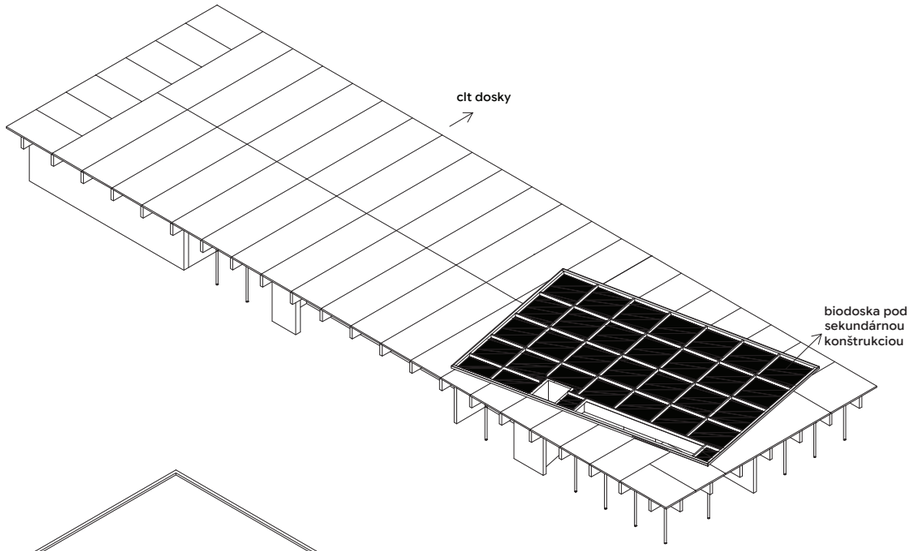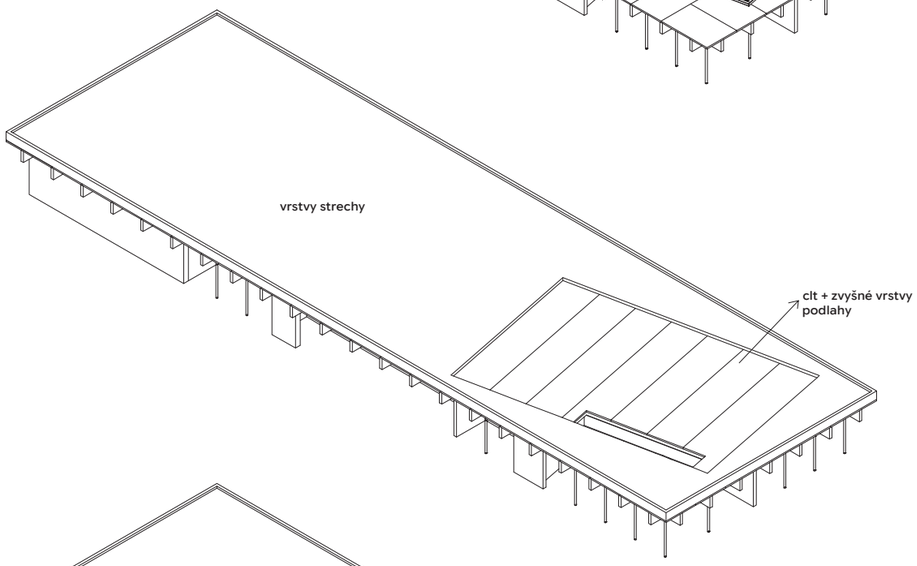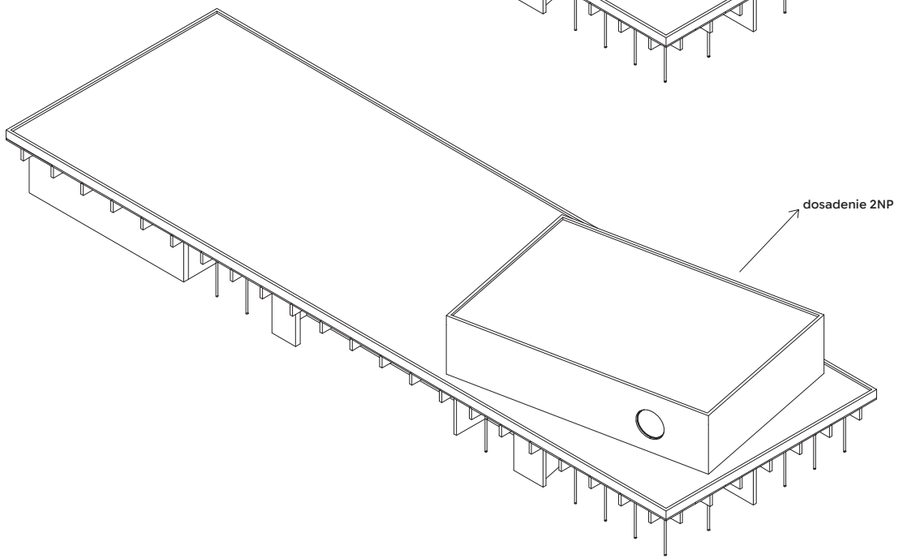construction