HULLABALOO

ECO, NOT EGO

For more information please scan the QR code

ENVIRONMENTAL FEATURES

LIGHT AND SPACE

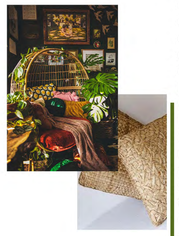

Green architecture aims to reduce the amount of resources used in the building's construction, maintenance, and operation, as well as the environmental damage caused by the emission, pollution, and waste of its components. The building's philosophical theory, science, and aesthetic are all conceived and built-in accordance with ecologically sustainable standards. Spending time in natural areas has been correlated with greater mental and spiritual health in adults; for children, it has been associated with increased physical activity and play.

RE
duce.
use.
cycle.
peat.

GEOMETRIC COHERENCY

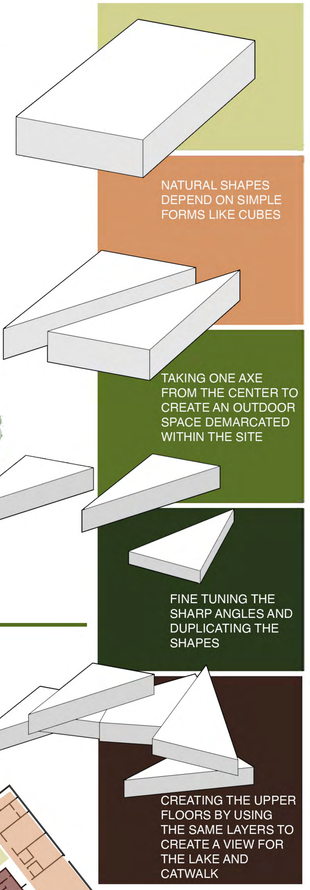

NATURAL SHAPES AND FORMS

SITE ANALYSIS

Approach
-Bus station (8 mins 450m)
-Pharmacy(3 mins 5950m)
-Chillout (11mins 6.8km)
-Hotel(15mins 5.8km

Legend
-Site
-Primary
-Secondary
-Tertairy
-Traffic
-Vegetation

Landmarks and nodes
-Buffalo Wings
-Rofayda Maternity
-New Urban Communities Authority
-Juhayna Company
-Arkan
-ABK-Egypt Bank
-Crown Plaza West-Arkan
-Compund Al Nada
-Mostafa El Salab

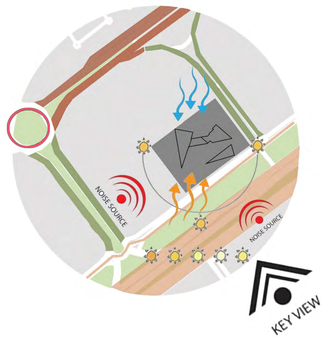

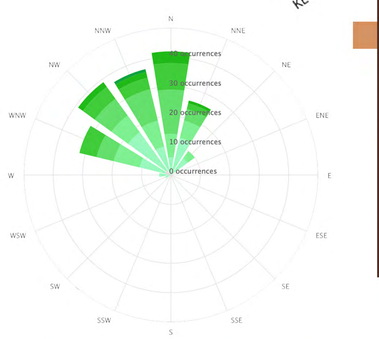

RESTORATIVE PATTERNS & PROCESSES

PROGRAM BUBBLE DIAGRAM

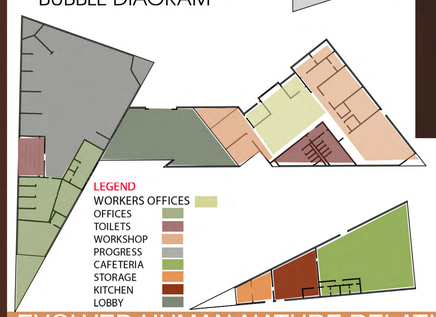

EVOLVED HUMAN-NATURE RELATIONSHIPS

S
-Daylight is utilized as best as possible.
-Less air pollution.
-Energy-efficient.
-Design can reduce stress, enhance creativity and clarity of thought.
-Presents a framework for relating the human biological science and nature.

W
-High initial cost.
-Maintenance may be difficult.
-Technology Problems.
-Experienced green construction workers may be rare.

O
-Green buildings add value to building assets.
-colliers view.
-Maximize the building orientation by exposing windows in the northern side.
-Green building market from global perspective.

T
-Performance risks incloude uncertainty surrounding the longetivity & warranty of new products.
-The use of untested materials.
-The impact of post-construction built-out on sustainability.
-Ignorance can lead to lenders & financial markets shunning the unknown.

LAYOUT SCALE 1:200

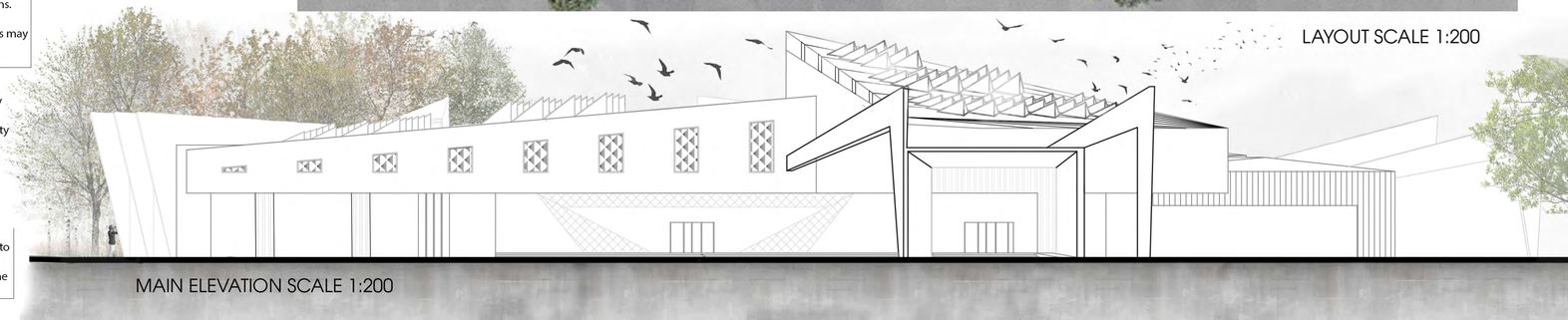

MAIN ELEVATION SCALE 1:200

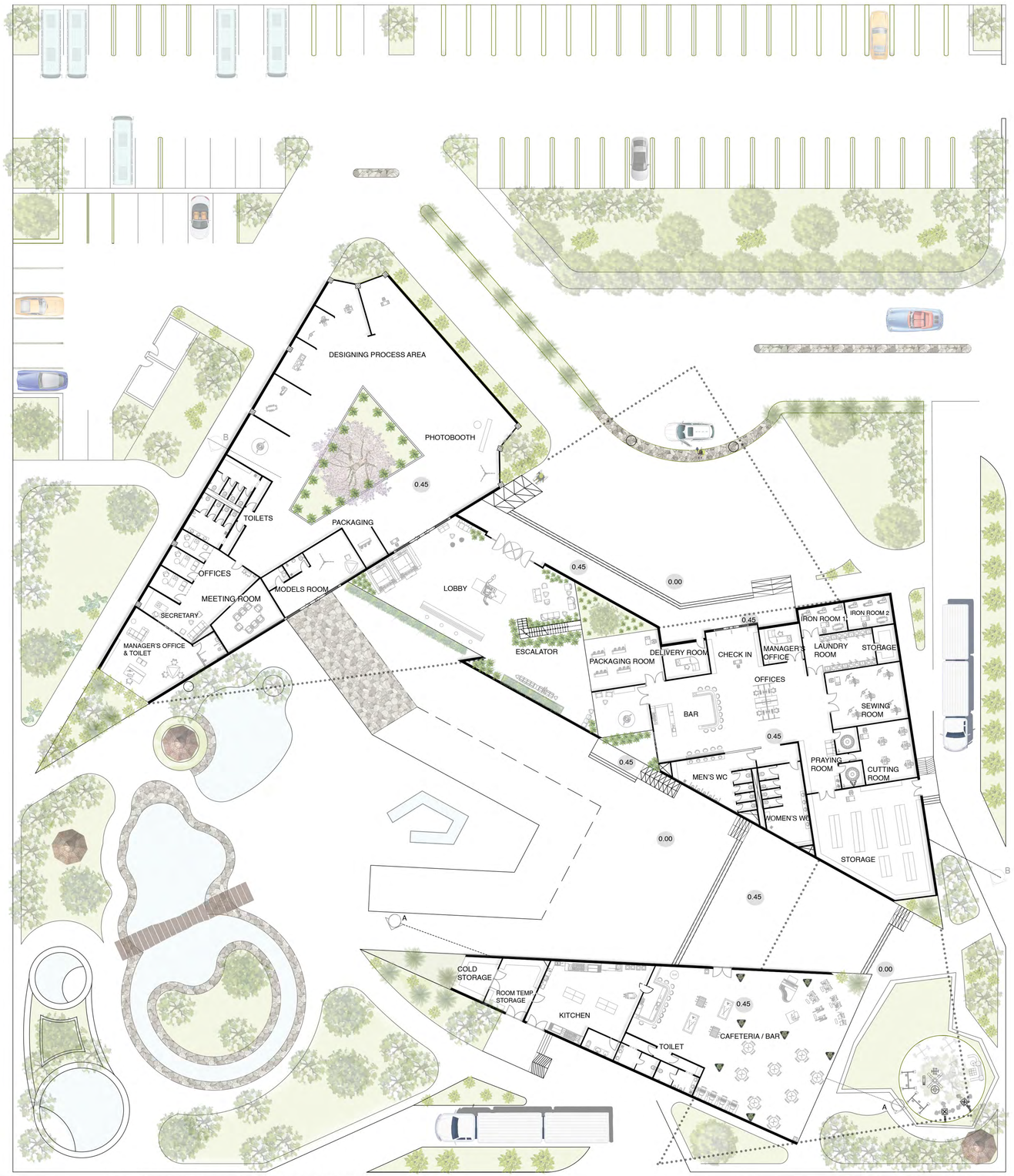

GROUND FLOOR PLAN SCALE 1:200

FIRST FLOOR PLAN SCALE 1:200

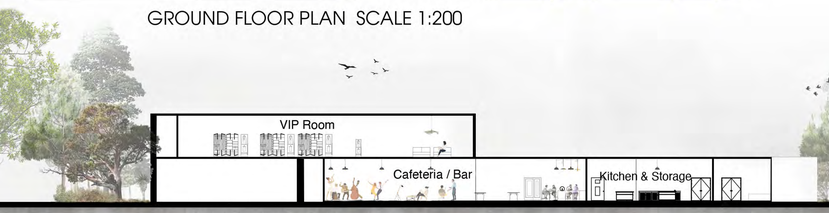

SECTION (A-A) SCALE 1:200

SECTION (B-B) SCALE 1:200

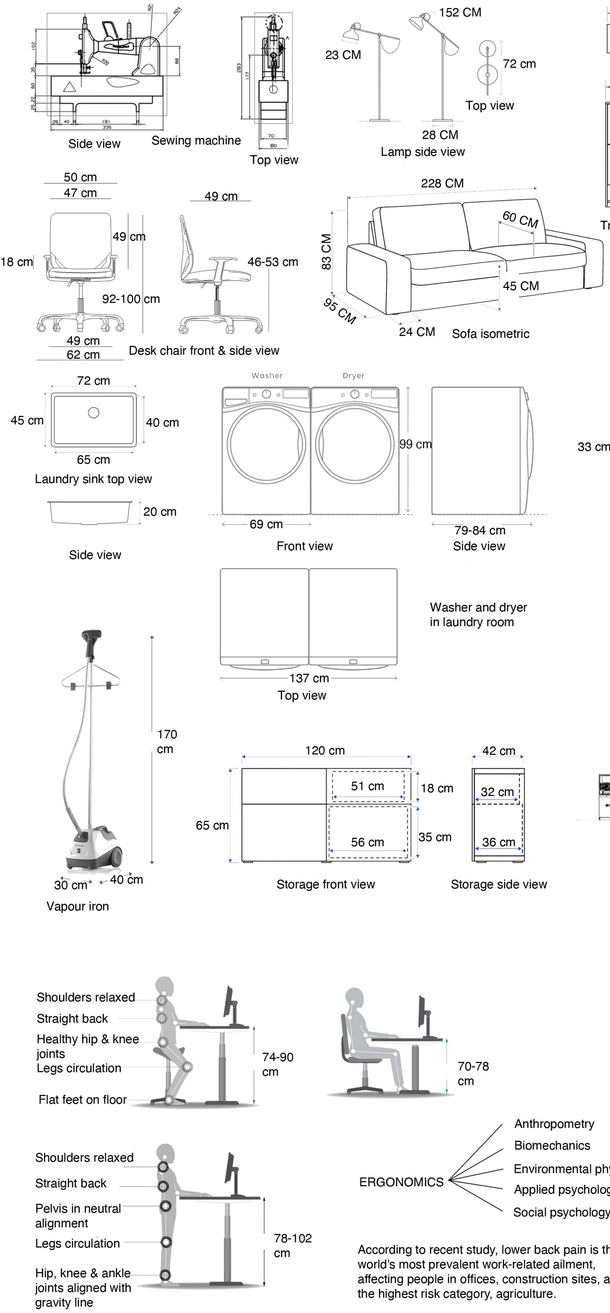

BLOW UP SCALE 1:50

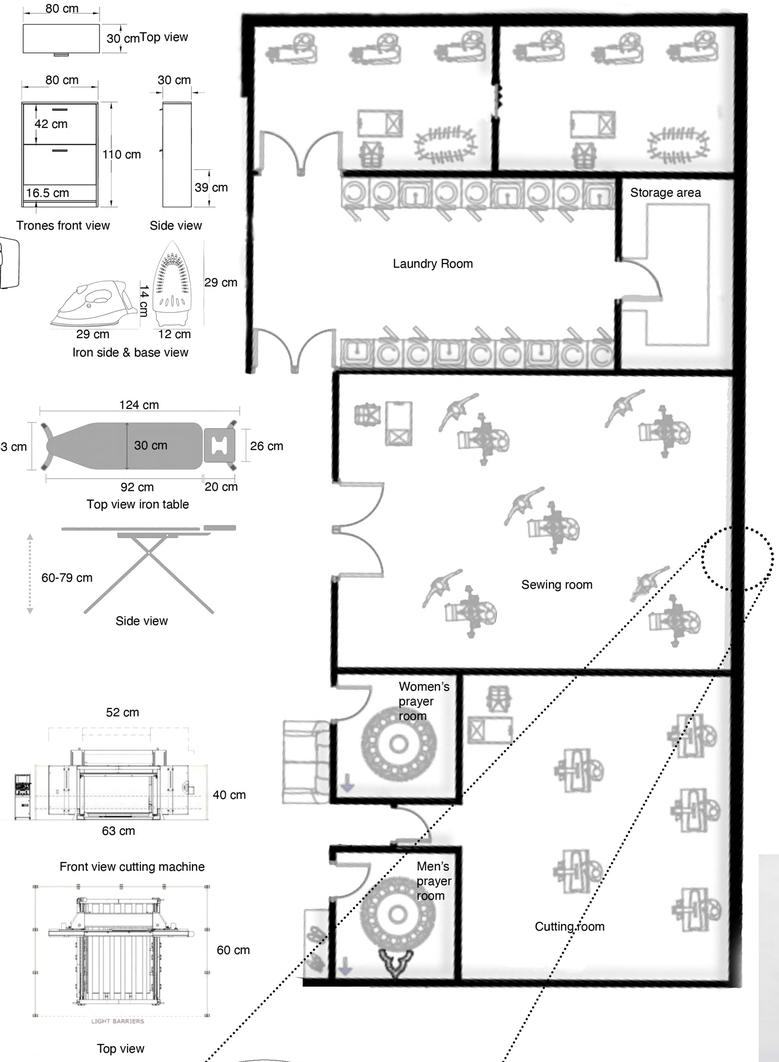

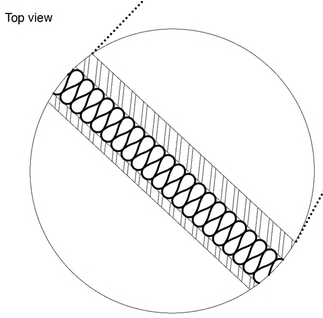

ERGONOMICS
- Anthropometry
- Biomechanics
- Environmental physics
- Applied psychology
- Social psychology

According to recent study, lower back pain is the world's most prevalent work-related ailment, affecting people in offices, construction sites, and, in the highest risk category, agriculture.

Ergonomics seeks to create safe, pleasant, and productive workplaces by incorporating human abilities and limits into workspace design, such as body size, strength, skill, speed, sensory capacities (vision, hearing), and even attitudes.

The main energy benefit of using concrete in buildings is its high thermal mass that leads to thermal stability. This saves energy and produces a better indoor environment for building users as mentioned below:

- Reduces the requirement for heating fuel by maximising the benefits of solar gain.
- Cuts heating energy use by 2 - 15%
- Evens out interior temperature swings.
- Postpones peak temperatures in offices and other business buildings until occupants have departed.
- Lowers peak temperatures and may eliminate the need for air conditioning.
- Can be utilised in conjunction with night-time ventilation to reduce the need for daytime cooling.
- When paired with air conditioning, it can cut cooling energy use by up to 50%.
- Has the potential to minimise building energy expenses.
- Will aid in future-proofing buildings against environmental issues.

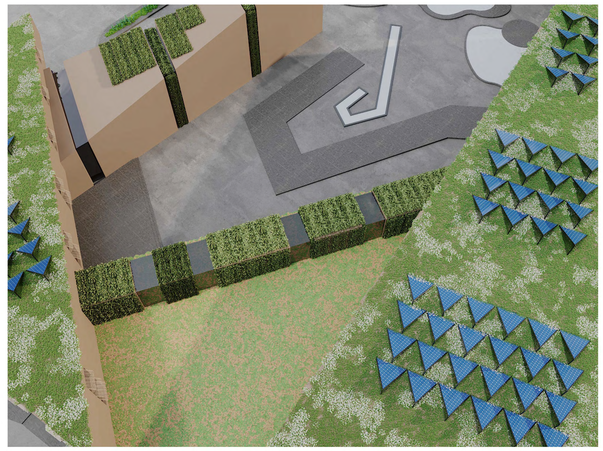

3D SHOTS

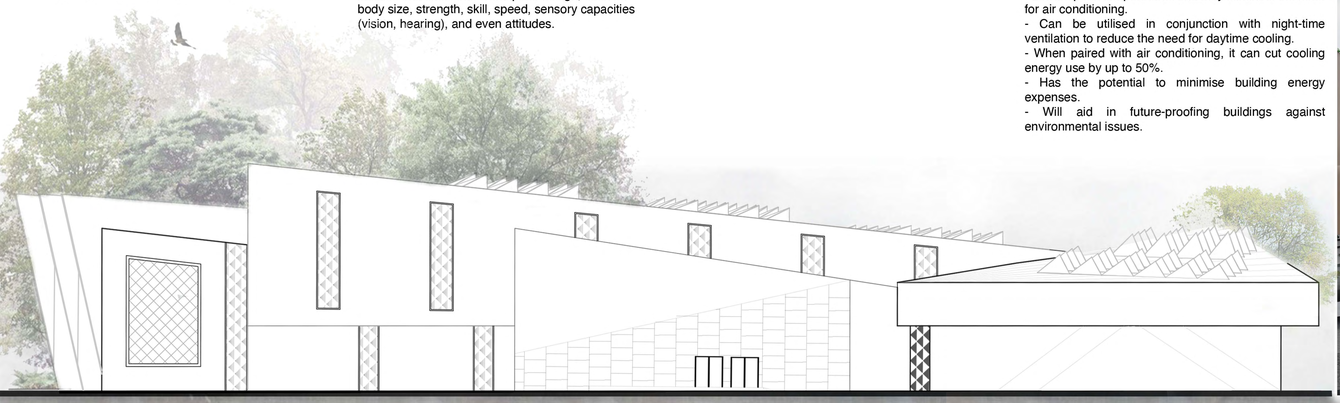

SECONDARY ELEVATION SCALE 1:200