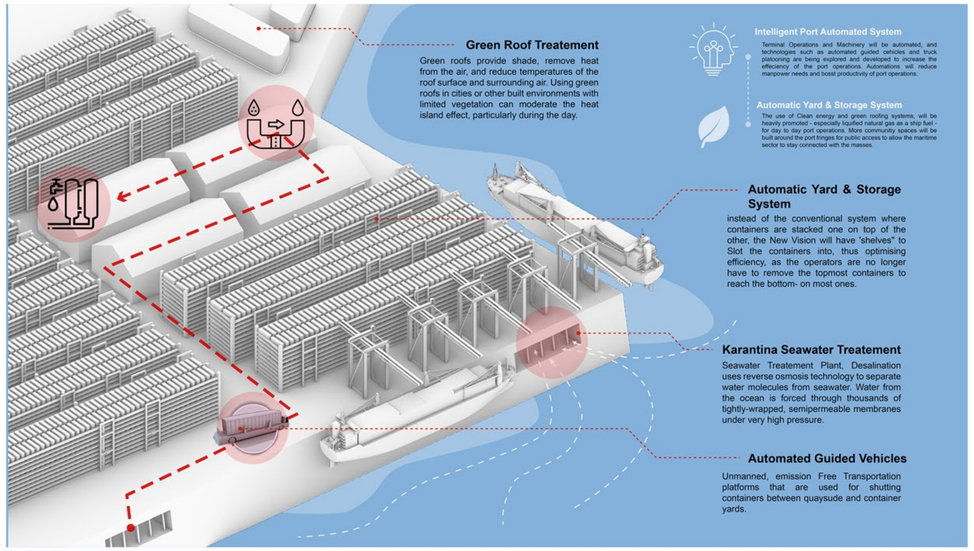

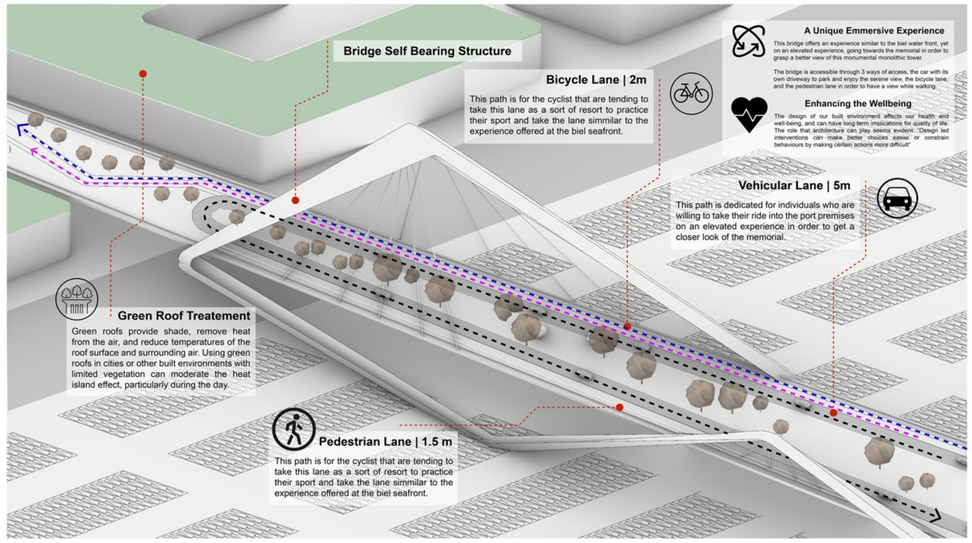

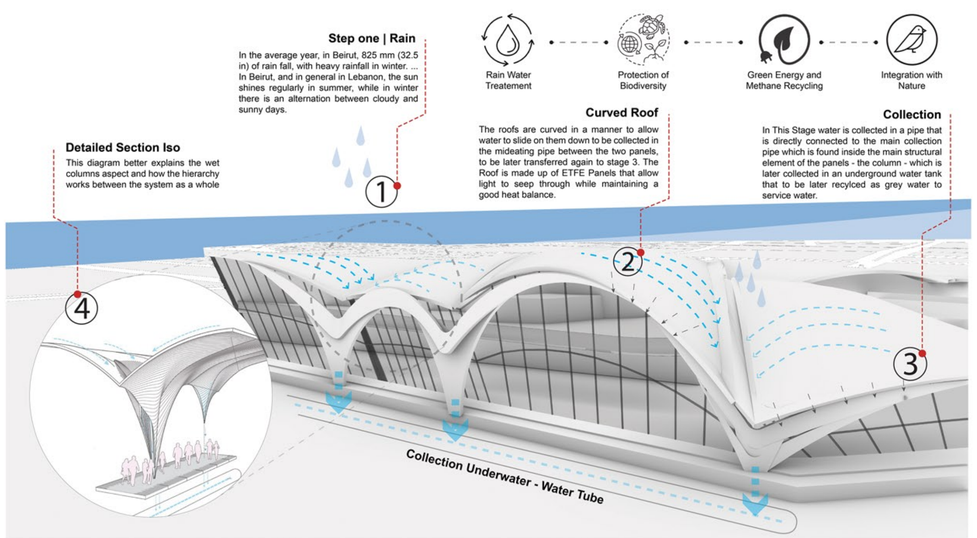

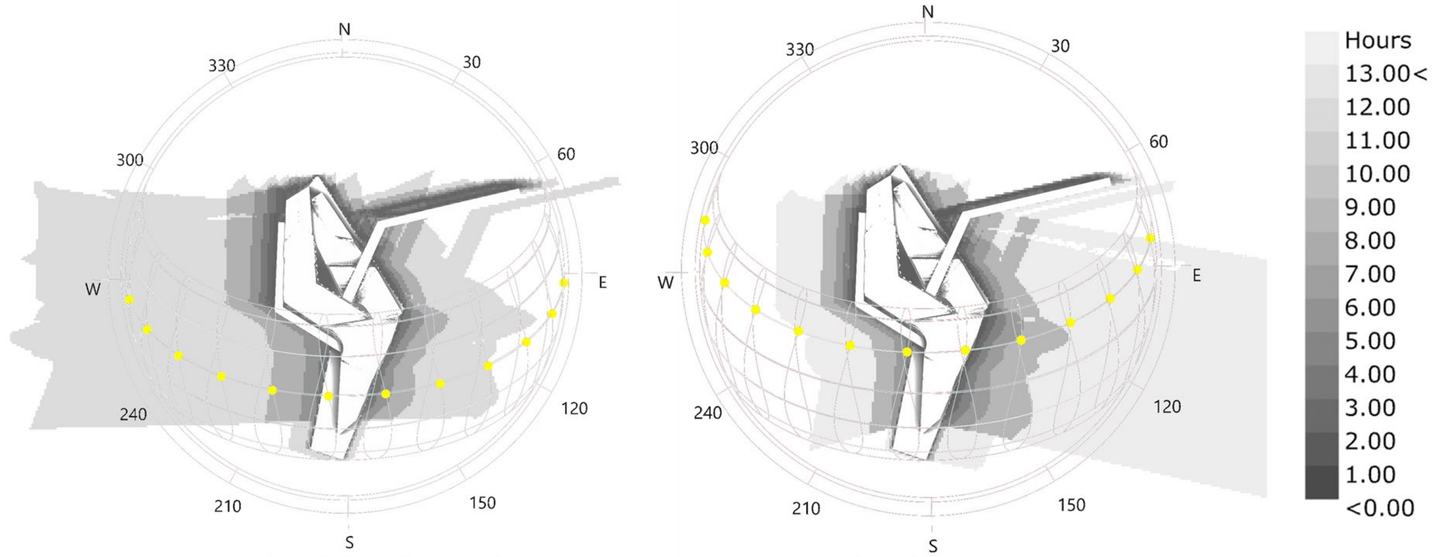

ALL TIMESTAMPS ON DECEMBER 21ST

ALL TIMESTAMPS ON JUNE 21ST

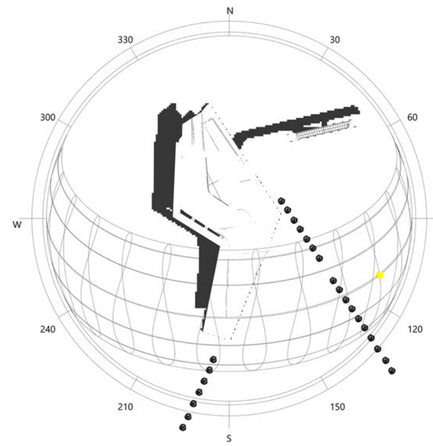

DEC 21ST | 8 AM

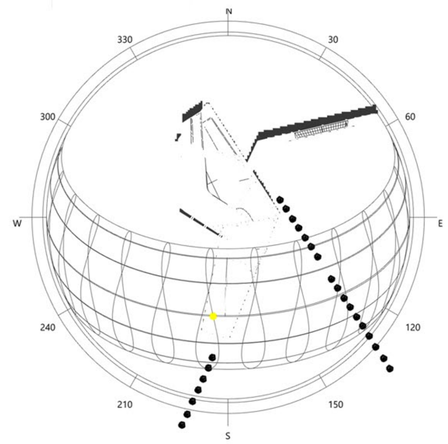

DEC 21ST | 12 PM

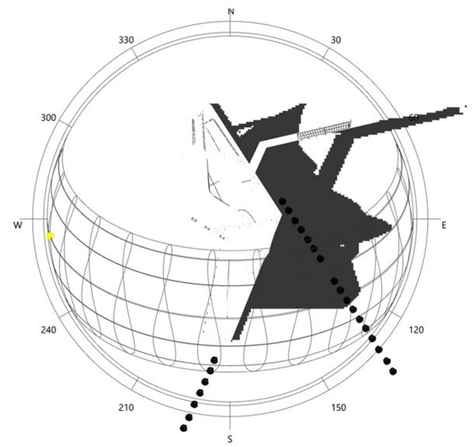

DEC 21ST | 17 PM

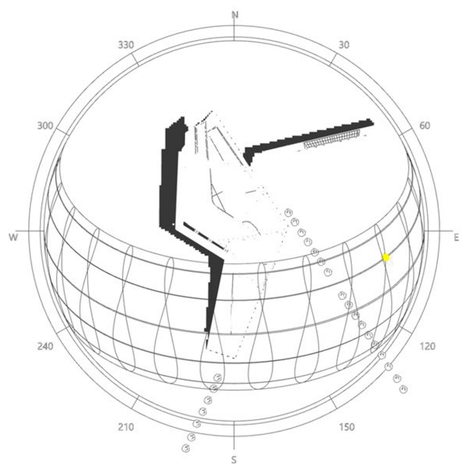

JUN 21ST | 8 AM

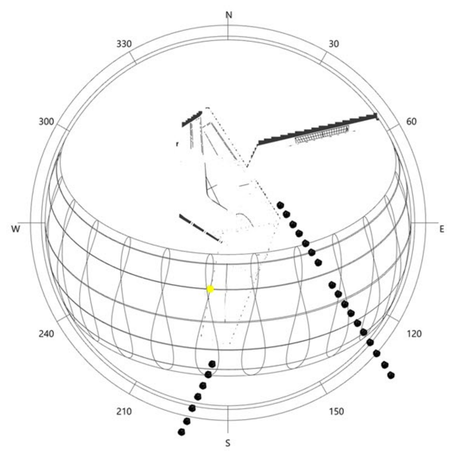

JUN 21ST | 12 PM

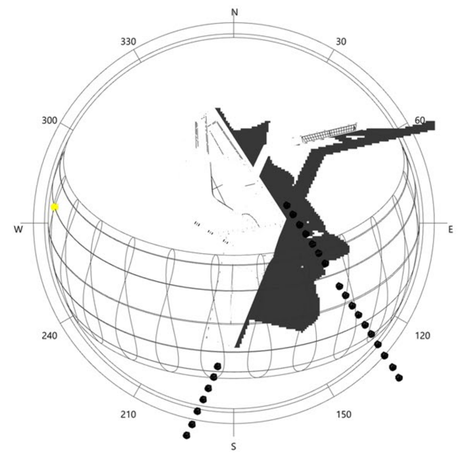

JUN 21ST | 17 PM